EXHIBIT "B"

FOREST ROAD SPECIFICATIONS

SUBGRADE WIDTH	SURFACED WIDTH	POINT TO POINT	STATION TO STATION	DITCH REQUIRED	OUTSLOPE
16 feet	N/A (dirt)	3A to 3B	0+00 to 7+90	Yes	No
16 feet	12 feet	4A to 4B	0+00 to 13+80	Yes	No
16 feet	12 feet	5A to 5B	0+00 to 1+00	Yes	No
16 feet	12 feet	I1 to I3	0+00 to 63+95	Yes	No
16 feet	12 feet	I3 to I4	0+00 to 82+15	Yes	No
16 feet	12 feet	I3 to I7	0+00 to 4+70	Yes	No
16 feet	12 feet	I5 to I6	0+00 to 7+65	Yes	No
16 feet	12 feet	I7 to I8	0+00 to 27+60	Yes	No
16 feet	12 feet	I7 to I9	0+00 to 26+40	Yes	No
16 feet	12 feet	I9 to I10	0+00 to 15+80	Yes	No
16 feet	12 feet	I9 to I12	0+00 to 41+65	Yes	No
16 feet	12 feet	I11 to I12	0+00 to 17+60	Yes	No
16 feet	12 feet	I12 to I13	0+00 to 54+00	Yes	No
16 feet	12 feet	I14 to I15	0+00 to 29+35	Yes	No
16 feet	12 feet	I16 to I17	0+00 to 19+35	Yes	No
16 feet	12 feet	I18 to I19	0+00 to 23+45	Yes	No

CLEARING. This work shall consist of clearing, removing, and disposing of all trees, snags, down timber, brush, surface objects, and protruding obstructions within the clearing limits.

Where clearing limits have not been staked, the clearing limits shall extend 10 feet back of the top of the cutslope and 5 feet out from the toe of the fill slope, or as directed by STATE. Clearing debris shall not be placed or permitted to remain in or under any road embankment sections. Clearing debris shall not be left lodged against standing trees.

All danger trees, leaners, and snags outside the clearing limits which could fall and hit the road shall be felled.

GRUBBING. This work shall consist of the removal or digging out of stumps and protruding objects.

All stumps shall be completely removed within the limits of required grubbing. Stumps overhanging cutslopes shall be removed. Grubbing debris shall not be placed or permitted to remain in or under any road embankment sections. Grubbing debris shall not be left lodged against standing trees. Grubbing classifications are as follows:

New construction - From the top of the cutslope to the toe of the fill.

Improvements and reconstructions - 4 feet back from the shoulder of the subgrade or ditch, whichever is widest, or as marked in the field.

EXHIBIT "B"

FOREST ROAD SPECIFICATIONS

CLEARING AND GRUBBING DISPOSAL. Scatter through openings in the timber outside of the cleared right-of-way, except areas where end-haul is required.

EXCAVATION. Excavation and grading shall not be done when weather and/or ground conditions are such that damage will result to existing subgrade or cause excessive erosion.

Excavation shall conform to STATE-engineered lines, grades, dimensions, and plans when provided.

All suitable excavated material shall be used where possible for the formation of fills, shoulders, and drainage structure backfills. Embankment materials shall be free of woody debris, brush, muck, sod, frozen material, and other deleterious materials. All fills and drainage structure backfills shall be machine compacted in lifts not to exceed 8 inches in depth.

Unless road design plans show otherwise, all roads shall be on a balanced cross section, except when the slope is over 50 percent; the road shall be on full bench for the width specified.

Excess excavation shall not be sidecast where material will enter a stream course or where material will accumulate in areas deemed a high-risk site by STATE.

ROAD WIDTH LIMITATIONS. PURCHASER shall obtain advance written approval from STATE to construct the road to a greater width than specified. Extra subgrade width shall be required for:

Fill Widening. Add to each fill shoulder 1 foot for fills 3 feet to 6 feet high; 2 feet for fills over 6 feet high.

Curve Widening. Widen the inside shoulder of all curves as follows: 400 divided by the radius of the curve equals the amount of extra width.

DRAINAGE

Ditches. Construct "V" ditch 3 feet wide and to a depth of 1 foot below subgrade. Subgrade shall be crowned at 4 to 6 percent.

TURNOUTS. Increase roadbed width an additional 8 feet for both subgrade and surfacing. Length shall be a minimum 25 feet, or as staked on the ground, plus 25-foot approaches at each end.

Location: Intervisible but not greater than 750 feet.

GRADING	Back Slopes	Fill Slopes
Rock	Vertical to 1/4:1	Not steeper
Common - side slopes 50% and over	3/4:1	than 1½:1
Common - side slopes less than 50%	1:1	
Common - turnpike (level) section	2:1	

Top of cutslope shall be rounded.

LANDINGS. Landings shall be constructed no less than 50 feet wide and no more than 70 feet wide. Surface is to be crowned for drainage, with general grade no more than 3 percent.

TURNAROUNDS. Increase subgrade width an additional 20 feet for a length of 20 feet at locations marked in the field.

SEASONAL WINTERIZATION. All dirt roads or unfinished subgrades shall be waterbarred in accordance with specifications in EXHIBIT H and blocked from vehicular traffic, prior to October 1, annually, and as directed by STATE.

EXHIBIT "B"

ROAD IMPROVEMENT INSTRUCTIONS

GENERAL ROAD IMPROVEMENT INSTRUCTIONS

(1) Roadside Brushing. Complete brushing according to the specifications in Exhibit E.

(2) Existing Underground Utilities. PURCHASER shall notify Knappa Water Association (Ed Johnson) at (503)458-6461, prior to operating. PURCHASER shall conduct activities near these utilities according to recommendations of the Knappa Water Association and STATE, and shall be responsible for any damage to the utility resulting from PURCHASER's activities. PURCHASER shall coordinate with the above listed utility in field locating underground utility lines.

(3) Culvert Replacement, Culvert Installation, Fill Reconstruction, and Fill Removal. Where fill reconstruction or culvert replacement is specified, fills shall be excavated to natural stream course levels. All woody debris encountered during fill excavation shall be removed. All waste materials shall be hauled to nearby waste areas and shall be uniformly sloped and compacted for drainage. Fill reconstruction backfill shall consist of select materials and be obtained from borrow pits, as directed by STATE. Backfill materials shall be hauled in where necessary and thoroughly compacted in accordance with Exhibit B. Crushed rock shall be used for backfilling excavation trenches less than 3 feet deep. STATE may require the use of crushed rock for culvert bedding. Removed culverts shall be hauled to an approved refuse site off of STATE land.

(4) Additional Requirements for Type F Stream Fill Construction are shown on Exhibit F.

(5) Riprap Rock Use. Where rock is specified for fill armor, rock shall be placed and tamped at a 1½:1 slope, beginning at the fill toes. Where rock is used for an energy dissipator, rock shall be placed below the culvert outlet and embedded for a minimum of 3 feet.

(6) Equipment. All excavation and riprap placement shall be performed using a minimum 1½ cubic-yard, track-mounted excavator.

(7) Drainage Ditches. Restore or construct ditchlines, including ditchouts, as directed by STATE. Clean out all culvert inlets and outlets for a 10-foot radius. Re-establish or construct culvert sediment basins. Waste materials from drainage ditches and sediment basins shall not be pulled across existing surfacing rock, but shall be placed in nearby waste areas and uniformly sloped and compacted for drainage, as directed by STATE. Damaged culvert inlets and/or outlets shall be repaired by opening them with a hydraulic jack, or cutting off the culvert end to allow for free passage of water at peak flow levels. Install a culvert marker at each newly installed culvert and at each existing culvert that is missing a marker that could be reached by a grader blade. Markers shall meet specifications in Exhibit C. Excavated materials shall be placed in a stable location, as directed by STATE.

EXHIBIT "B"

ROAD IMPROVEMENT INSTRUCTIONS

GENERAL ROAD IMPROVEMENT INSTRUCTIONS

(8) Subgrade Preparation and Application of New Surfacing Rock.

(a) Complete roadside brushing, culvert installations, fill reconstructions, and other specified work prior to the application of new surfacing rock.

(b) Cut out all chuckholed and/or washboarded sections from the existing surfacing.

(c) Apply required base and leveling rock, as directed by STATE.

(d) Process (grade and mix) the existing surfacing and added base rock. Provide for a crown of ½ inch per foot, and compact in accordance with Exhibit B.

(e) Upon completion of above required work, apply, process, and compact surfacing rock in accordance with specifications in Exhibit B.

EXHIBIT "B"

ROAD IMPROVEMENT INSTRUCTIONS

SPECIFIC ROAD IMPROVEMENT INSTRUCTIONS

Segment	Station	Work Description
I1 to I3	0+00	Point I1.
	1+75	Remove existing metal gate, and haul off from State Lands to a location approved by STATE.
	5+30	Utility Location. Water well on right, and underground water line. Avoid all structures and buried utilities.
	6+45	Clean inlet and repair crushed outlet of existing culvert.
	17+00	Install culvert across West Big Noise Road. Backfill trench with 24 cubic yards of 1½"-0" crushed rock.
	19+35	Install culvert across West Big Noise Road. Backfill trench with 24 cubic yards of 1½"-0" crushed rock. Construct energy dissipator utilizing 12 cubic yards of 24"-6" riprap rock.
	22+90	Install culvert across West Big Noise Road. Backfill trench with 24 cubic yards of 1½"-0" crushed rock.
	27+60	Install culvert across West Big Noise Road. Backfill trench with 24 cubic yards of 1½"-0" crushed rock.
	34+60	Repair crushed outlet on existing culvert.
	41+05	Install culvert across West Big Noise Road. Backfill trench with 24 cubic yards of 1½"-0" crushed rock.
	51+65	Install culvert across West Big Noise Road. Backfill trench with 24 cubic yards of 1½"-0" crushed rock.
	54+40	Install culvert across West Big Noise Road. Backfill trench with 24 cubic yards of 1½"-0" crushed rock.
	59+25	Install culvert marker on existing culvert.
	63+95	Point I3.
I3 to I4	0+00	Point I3.
	8+80	Utilize 12 Cubic Yards of 24"-6" riprap rock to construct energy dissipator at outfall of existing culvert.
	12+30	Construct ditch-out left and reopen old ditch-out on right.
	20+55	Install culvert across West Big Noise Road. Backfill trench with 24 cubic yards of 1½"-0" crushed rock.
	26+40	Point I5.
	31+10	Repair inlet to existing culvert.
	32+85	Construct ditch-out left.

EXHIBIT "B"

ROAD IMPROVEMENT INSTRUCTIONS

SPECIFIC ROAD IMPROVEMENT INSTRUCTIONS

Segment	Station	Work Description
I3 to I4 (cont.)	35+80	Install culvert across West Big Noise Road. Backfill trench with 24 cubic yards of 1½"-0" crushed rock.
	47+50	Buried cable crossing.
	49+85	Improve ditch-out on right.
	58+65	Install culvert across West Big Noise Road. Backfill trench with 24 cubic yards of 1½"-0" crushed rock. Excavate drainage ditch from the outlet a distance of 40 feet at a 5% gradient.
	63+35	Install culvert across West Big Noise Road. Backfill trench with 24 cubic yards of 1½"-0" crushed rock.
	64+55	Point I11.
	77+45	Install culvert across West Big Noise Road. Backfill trench with 24 cubic yards of 1½"-0" crushed rock.
	82+15	Point I4.
I3 to I7	0+00	Point I3.
	0+60	Culvert Replacement and Fill Reconstruction. Utilize 24 cubic yards of 6"-0" pit- run rock for culvert bedding and 36 cubic yards of 1½"-0" crushed rock as culvert bedding and backfill. Utilize common materials to reconstruct fill to match existing grades. Fill slopes shall be at 1½:1. Utilize 24 cubic yards of 4"-0" crushed rock for base rock replacement. Finished subgrade width shall be 18 feet with a 14-foot running surface. Utilize existing riprap rock to construct an energy dissipator.
	4+70	Point I7.
I7 to I8	0+00	Point I7.
	2+35	Construct ditch-out left.
	7+05	Culvert Replacement. Replace existing culvert. Backfill trench with 24 cubic yards of 1½"-0" crushed rock.
	11+75	Construct ditch-out on right
	14+65	Improve ditch-outs on left and right sides of road.
	20+55	Construct ditch-out on right.
	23+45	Construct ditch-out on left.
	27+60	Junction with power-line road.
	28+90	Point I8.

EXHIBIT "B"

ROAD IMPROVEMENT INSTRUCTIONS

SPECIFIC ROAD IMPROVEMENT INSTRUCTIONS

Segment	Station	Work Description
I7 to I9	0+00	Point I7.
	9+40	Type F Stream Fill Reconstruction.
	20+55	Repair existing culvert inlet.
	23+45	Culvert Replacement and Fill Reconstruction: Utilize 60 cubic yards of pit-run rock for culvert bedding and 48 cubic yards of 1½"-0" for culvert bedding and backfill. Utilize common materials to reconstruct fill to match existing grades. Utilize 24 cubic yards of 4"-0" for base rock for road surface. Utilize 24 cubic yards of 24"-6" riprap rock as an energy dissipator. Utilize 60 cubic yards of 24"-6" riprap for armoring fill slopes. Fill slopes shall be at 1½:1. The riprap rock shall be placed and tamped for a minimum thickness of 2 feet beginning at the toes. Finished sub-grade width shall be 20-feet with a 16-foot running surface
	26+40	Point I9.
I9 to I10	0+00	Point I9.
	6+75	Install culvert. Backfill trench with 24 cubic yards of 1½"-0" crushed rock. Construct ditch-out on right.
	15+85	Point I10. Construct ditch-out on right.
I9 to I12	0+00	Point I9.
	5+85	Install marker on existing culvert. Construct ditch-out on left.
	14+65	Culvert replacement. Backfill trench with 24 cubic yards of 1½"-0" crushed rock.
	41+65	Point I12.
I11 to I12	0+00	Point I11.
	8+80	Utilize 50 cubic yards of 24"-6" riprap rock to construct an energy dissipator.
I12 to I13	0+00	Point I12.
	5+85	Install culvert. Backfill trench with 12 cubic yards of 1½"-0" crushed rock. Utilize 12 cubic yards of 24"-6" riprap rock to construct energy dissipator.
	11+15	Install culvert. Backfill trench with 12 cubic yards of 1½"-0" crushed rock. Utilize 12 cubic yards of 24"-6" riprap rock to construct energy dissipator.
	13+65	Utilize 12 cubic yards of 24"-6" riprap rock to construct energy dissipator on existing culvert.
	29+90	Improve ditch-out on right.
	31+70	Point I14.
	34+60	Install culvert. Backfill trench with 12 cubic yards of 1½"-0" crushed rock.
	38+15	Install culvert marker on existing culvert.
	45+75	Install culvert. Backfill trench with 12 cubic yards of 1½"-0" crushed rock. Construct ditch-out on right.
	54+00	Point I13.

EXHIBIT "B"

ROAD IMPROVEMENT INSTRUCTIONS

SPECIFIC ROAD IMPROVEMENT INSTRUCTIONS

Segment	Station	Work Description
I14 to I15	0+00	Point I14.
	2+95	Install culvert. Backfill trench with 12 cubic yards of 1½"-0" crushed rock. Construct ditch-out on left.
	11+75	Install culvert. Backfill trench with 12 cubic yards of 1½"-0" crushed rock.
	25+25	Install culvert. Backfill trench with 12 cubic yards of 1½"-0" crushed rock.
	29+35	Point I15. Point 5A
I16 to I17	0+00	Point I16.
	5+30	Install culvert. Backfill trench with 12 cubic yards of 1½"-0" crushed rock.
	8+20	Install culvert. Backfill trench with 12 cubic yards of 1½"-0" crushed rock. Utilize 12 cubic yards of 24"-6" riprap rock to construct energy dissipator.
	19+35	Point I17.
I18 to I19	0+00	Point I18
	5+30	Install marker and repair culvert inlet on existing culvert.
	8+80	Begin ditch reconstruction both sides of the road.
	11+75	End ditch reconstruction and end base rock restoration.
	12+90	Repair inlet of existing culvert. Utilize 12 cubic yards of 24"-6" riprap rock to construct energy dissipator.
	19+35	Construct ditchouts on both sides of the road.
	23+45	Point I19

EXHIBIT "B"

ROAD SURFACING

TYPE OF ROCK	SIZE OF ROCK	CUBIC YARD PER STATION	COMPACTED DEPTH	POINT TO POINT	STATION TO STATION	TOTAL VOLUME (CY)
Crushed	4"-0"	52	8"	4A to 4B	0+00 to 13+80	718
Crushed	4"-0"	52	8"	5A to 5B	0+00 to 1+00	52
Crushed	¾"-0"	19	3"	I1 to I3	0+00 to 63+95	1,215
Crushed	¾"-0"	19	3"	I3 to I4	0+00 to 82+15	1,561
Crushed	¾"-0"	19	3"	I3 to I7	0+00 to 4+70	89
Crushed	4"-0"	25	4"	I5 to I6	0+00 to 7+65	191
Crushed	¾"-0"	19	3"	I7 to I9	0+00 to 26+40	502
Crushed	4"-0"	25	4"	I9 to I10	0+00 to 15+80	396
Crushed	¾"-0"	19	3"	I9 to I12	0+00 to 41+65	791
Crushed	¾"-0"	19	3"	I11 to I12	0+00 to 17+60	334
Crushed	1½"-0"	19	3"	I12 to I13	0+00 to 48+10	914
Crushed	4"-0"	25	4"	I12 to I13	48+10 to 54+00	148
Crushed	4"-0"	25	4"	I14 to I15	0+00 to 29+35	734
Crushed	4"-0"	25	4"	I18 to I19	0+00 to 23+45	586
TURNOUTS:		**VOLUME/T.O.**		**NO. OF T.O.**	**POINT TO POINT**	
Crushed	4"-0"	24		2	4A to 4B	48
Crushed	¾"-0"	12		15	I1 to I3	180
Crushed	¾"-0"	12		14	I3 to I4	168
Crushed	¾"-0"	12		1	I3 to I7	12
Crushed	4"-0"	24		2	I5 to I6	48
Crushed	¾"-0"	12		6	I7 to I9	72
Crushed	4"-0"	24		2	I9 to I10	48
Crushed	¾"-0"	12		7	I9 to I12	84
Crushed	¾"-0"	12		3	I11 to I12	36
Crushed	1½"-0"	12		8	I12 to I13	96
Crushed	4"-0"	24		2	I14 to I15	48
Crushed	4"-0"	24		3	I18 to I19	72

EXHIBIT "B"

ROAD SURFACING

TYPE OF ROCK TURNAROUNDS:	SIZE OF ROCK	VOLUME/T.A.	NO. OF T.A.	POINT TO POINT	TOTAL VOLUME (CY)
Crushed	4"-0"	24	1	4A to 4B	24
Crushed	4"-0"	24	1	I5 to I6	24
Crushed	4"-0"	24	1	I9 to I10	24
Crushed	4"-0"	24	1	I12 to I13	24
Crushed	4"-0"	24	1	I14 to I15	24
Crushed	4"-0"	24	1	I16 to I17	24
Crushed	4"-0"	24	1	I18 to I19	24
JUNCTIONS:		VOLUME/ JCTS.	NO. OF JCTS.		
Crushed	4"-0"	24	1	4A to 4B	24
Crushed	¾"-0"	12	5	I1 to I3	60
Crushed	¾"-0"	12	6	I3 to I4	72
Crushed	¾"-0"	12	2	I3 to I7	24
Crushed	¾"-0"	12	1	I7 to I9	12
Crushed	¾"-0"	12	2	I9 to I12	24
Crushed	1½"-0"	24	3	I12 to I13	72
Crushed	4"-0"	24	1	I12 to I13	24
Crushed	4"-0"	24	1	I14 to I15	24
Crushed	4"-0"	24	1	I18 to I19	24
Crushed	4"-0"	24	1	I12 to I13	24
LANDINGS:		VOLUME/ LANDING	NO. OF LDGS.	LOCATION	
Pit-Run	6"-0"	80	3	4B, 5B, I6	240
Pit-Run	6"-0"	80	1	I10	80
Pit-Run	6"-0"	80	1	15+40 I12 to I13	80
Pit-Run	6"-0"	80	1	18+00 I16 to I17	80
Pit-Run	6"-0"	80	1	I19	80

EXHIBIT "B"

ROAD SURFACING

TYPE OF ROCK MISCELLANEOUS:	SIZE OF ROCK	USE	LOCATION	TOTAL VOLUME (CY)
Crushed	¾"-0"	Curve Widening	I1 to I3	60
Crushed	1½"-0"	Culvert Bedding and Backfill	I1 to I3	168
Riprap	24"-6"	Energy Dissipator	I1 to I3	12
Crushed	¾"-0"	Curve Widening	I3 to I4	84
Crushed	1½"-0"	Culvert Bedding and Backfill	I3 to I4	120
Riprap	24"-6"	Energy Dissipator	I3 to I4	12
Crushed	1½"-0"	Culvert Bedding and Backfill	I3 to I7	36
Crushed	4"-0"	Base Rock	I3 to I7	24
Pit-Run	6"-0"	Culvert Bedding Rock	I3 to I7	24
Crushed	1½"-0"	Leveling Rock	I7 to I8	120
Crushed	1½"-0"	Culvert Bedding and Backfill	I7 to I8	24
Crushed	¾"-0"	Surface Restoration Rock	I7 to I9	49
Crushed	1½"-0"	Culvert Bedding and Backfill	I7 to I9	108
Crushed	4"-0"	Base Rock	I7 to I9	88
Pit-Run	6"-0"	Culvert Bedding Rock	I7 to I9	60
Riprap	24"-6"	Energy Dissipator	I7 to I9	24
Riprap	24"-6"	Fill Armor	I7 to I9	160
Crushed	1½"-0"	Culvert Bedding and Backfill	I9 to I10	24
Crushed	4"-0"	Base Rock Restoration 8+80 to 15+85	I9 to I10	120
Crushed	1½"-0"	Culvert Bedding and Backfill	I9 to I12	24
Riprap	24"-6"	Energy Dissipator	I11 to I12	50
Crushed	1½"-0"	Culvert Bedding and Backfill	I12 to I13	48
Riprap	24"-6"	Energy Dissipator	I12 to I13	36
Crushed	¾"-0"	Traction Rock	I14 to I15	56
Crushed	1½"-0"	Culvert Bedding and Backfill	I14 to I15	36
Crushed	1½"-0"	Leveling Rock	I16 to I17	50
Crushed	1½"-0"	Culvert Bedding and Backfill	I16 to I17	24
Riprap	24"-6"	Energy Dissipator	I16 to I17	12
Crushed	4"-0"	Base Rock Restoration 5+85 to 8+80	I18 to I19	108
Riprap	24"-6"	Energy Dissipator	I18 to I19	12

ROCK TOTALS (CY)	3/4"-0"	1 1/2"-0"	4"-0"	6"-0"	24"-6"
12,028	5,485	1,864	3,717	644	318

Additional rock for curve widening is required and has been included in the volume estimates.

Roads shall be uniformly graded and approved by STATE prior to rocking. For typical cross section, see Forestry Department Drawing Nos. 351-C and 351-D at the Forestry Department district office.

EXHIBIT "B"

ROCK ACCOUNTABILITY

Subgrades must be approved by STATE prior to rocking. Rocking must be done only when weather conditions are acceptable to STATE, and must be suspended when muddy water could enter streams from runoff.

Rock accountability shall be determined by the following methods, as directed by STATE. STATE shall be given 24 hours' notice prior to rocking.

Rock Checking. All rock spreading shall be done only when a STATE representative is present. STATE shall issue a receipt for each load delivered, and rock shall be measured without allowance for shrinkage or shakedown during hauling. Total truck measure volume for each road segment shall be as shown on Exhibit B. Deliver at least 600 cubic yards per 8-hour shift, unless otherwise approved by STATE. A penalty of $10 for each 10 cubic yards which are not delivered during a single shift shall be billed, and payment shall be required prior to final acceptance of the project by STATE.

Depth Measurement. Rock shall be spread and compacted according to the depths specified in Exhibit B. Truck measure volumes are given, but shall not limit the amount of rock spread.

Depth shall be determined in the most compacted area of the surface cross section. If additional rock is required because of insufficient depth, it shall be added by truck measure to those areas that were slighted. The conversion from compacted yardage to truck yardage is 1.3 multiplied by the compacted yardage equals truck yardage.

The depth of compacted aggregates shall not vary more than 1 inch from the depth specified in Exhibit B. The average depth for each road segment shall be the specified depth or greater. Surfacing areas shall be staked by STATE.

Load Records. Notify STATE before spreading the rock and maintain a record of all rock delivered for spreading. Make the record available for STATE inspection. A report listing the amount of rock delivered the prior month must be submitted no later than the 15th of each month.

EXHIBIT "B"

COMPACTION AND PROCESSING REQUIREMENTS

Subgrade. Subgrade surfaces of the road segments listed below shall be graded and compacted prior to rocking. Compaction shall be accomplished by traveling all surfaces from shoulder to shoulder until visible deformation ceases, or in the case of a sheepsfoot roller, the roller "walks out." A minimum of 3 passes shall be made over the entire width and length of the road. A pass is defined as traveling a road section in one direction and then back over that same section again. Compaction shall be accomplished by using one or more of the approved equipment options listed below:

ROAD SEGMENT	COMPACTION EQUIPMENT OPTIONS
All Road Construction and Road Improvement Segments, Except Segment 3A to 3B.	1

Fills. Embankments and fills shall be placed in (approximately) horizontal layers not more than 8 inches in depth. Each layer shall be separately, and thoroughly, compacted. Compaction equipment shall be operated over the entire width of each layer until visible deformation of the layers ceases or, in the case of a sheepsfoot roller, the roller "walks out." A minimum of 3 passes shall be made over the entire width and length of each layer. A pass is defined as traveling a fill layer in one direction and then back over that same layer again.

Placing individual rocks or boulders with more depth than the allowed layer thickness shall be permitted, provided the embankment will accommodate them. Such rocks and boulders shall be at least 6 inches below the subgrade. They shall be carefully distributed and the voids filled with finer material, forming a dense and compacted mass. Compaction shall be accomplished by using one or more of the approved equipment options listed below:

ROAD SEGMENT	COMPACTION EQUIPMENT OPTIONS
All Road Construction and Road Improvement Segments	1 or 2 or 3; and 4

Crushed Rock. The rock shall be uniformly mixed and spread in layers on the approved roadbed. Each layer of crushed rock shall be moistened or dried to a uniform moisture content suitable for maximum compaction and compacted in layers not to exceed 6 inches in depth. When more than 1 layer is required, each shall be shaped and compacted before the succeeding layer is placed. Any irregularities or depressions that develop during compaction of the top layer shall be corrected by loosening the material at these places and adding or removing material until the surface is smooth and uniform. Each layer shall be compacted with a minimum of 3 passes over the entire width and length of the road. A pass is defined as traveling a road section in one direction and then back over that same section again. Compaction shall be accomplished by using one or more of the approved equipment options listed below:

ROAD SEGMENT	COMPACTION EQUIPMENT OPTIONS
All Road Construction and Road Improvement Segments Requiring Crushed Rock.	1

EXHIBIT "B"

COMPACTION EQUIPMENT OPTIONS

(1) Vibratory Rollers. The drum shall have a smooth surface, a diameter not less than 48 inches, a width not less than 58 inches, and a turning radius of 15 feet or less. Vibration frequency shall be regulated in steps to 1400, 1500, and 1600 VPM, corresponding to engine speeds of 1575, 1690, and 1800 RPM. The centrifugal force developed shall be 7 tons at 1600 VPM. It shall be activated by a power unit of not less than 25 horsepower. The vibratory roller shall be self-propelled and operated at speeds ranging from 0.9 mile to 1.8 miles per hour, as directed by STATE.

(2) Tampingfoot Compactors. Tampingfoot or sheepsfoot compactors shall exert a minimum pressure of 250 pounds per square inch on the ground area in contact with the tamping feet. The compactor shall cover a minimum width of 60 inches per pass and weigh a minimum of 16,000 pounds.

(3) Rubber-Tired Skidders. A rubber-tired skidder weighing a minimum of 20,000 pounds shall be operated over the fill layers so that the entire surface comes into contact with the tires. Skidders with oversized tires (high floatation) are not acceptable for compaction.

(4) Vibratory Hand-Operated or Backhoe-Mounted Tamper. Vibratory hand held or hydraulic tampers shall be used for compaction of backfill around culverts. The tamper shoe dimensions shall be a minimum of 10" X 13" and capable of a centrifugal force of 2,250 pound.

EXHIBIT "C"

CULVERT SPECIFICATIONS

All culvert materials shall be furnished and installed by PURCHASER, unless otherwise specified in the contract. Culverts shall conform to the material and fabricating requirements of Sections 2410 and 2420 of the "Standard Specifications for Highway Construction" prepared by the Highway Division of the Oregon State Department of Transportation. All culverts shall be constructed with of double-walled polyethylene except for Culvert No. 18 (112" X 75" Pipe Arch, 3" X 1" corrugations) which shall be constructed of 12 gauge aluminized steel. Double-walled polyethylene pipe shall meet the requirements of AASHTO M-294-901, Type S. Corrugation types and shapes other than those meeting the above minimum Highway requirements, shall be approved in writing by STATE.

Culverts shall be located according to the alignment and grade as shown on the Plan and Profile, and/or as staked in the field, or as stipulated in special instructions.

The STATE Representative shall determine final culvert locations and stake the locations in the field prior to installation.

Culvert grade shall slope away from ditch grade at least 2 percent unless otherwise specified.

The foundation and trench walls for all culverts shall be free from logs, stumps, limbs, stones over 3 inches, and other objects which would dent or damage the pipe during installation or use. If tamping is required, the trench shall be excavated wide enough to permit working on each side of pipe. Bedrock shall be excavated as required to provide a uniform foundation for the full length of the culvert.

A bedding of granulated material or job-excavated soil shall be placed to provide a wide band of support and to transmit the load from above evenly over the entire length of the pipe.

Transporting of the pipe shall be done carefully. Dragging or allowing free fall from trucks or into trenches shall not be permitted. Damage to bituminous coating shall be repaired before the pipe is covered.

On new installations, joining shall be done with bands of like material and corrugations. Manufacturers' instructions shall be followed for prefabricated pipe assembly.

Tamping is required as specified in Exhibit B and shall be done in 8-inch lifts, 1 pipe diameter each side of the pipe to 85 percent density or over, and to the minimum fill height as specified below. Additional fill shall be embankment material.

Fill heights, if not shown on a road plan and profile, shall be in accordance with those shown in Drawing No. 2094, "Fill Height Tables," prepared by the Highway Division of the Oregon State Department of Transportation. Any deviation must be approved by STATE.

Minimum height of cover over top of culvert to subgrade when road is to be rocked shall be as follows: 12" for aluminized steel culverts 18" to 36", 18" for aluminized steel culverts 42" to 96", and 12" for polyethylene culverts (add 6" for roads which will not be rocked). Minimum vertical cover for other steel designs shall be as specified by STATE.

Lengths of individual culvert sections shall be not less than 10 feet, unless otherwise provided for in special instructions.

EXHIBIT "C"

CULVERT SPECIFICATIONS

The ends of each culvert shall be free of logs and debris which would restrict the free flow of water. Culverts in Type F streams must allow free passage of fish as provided in the Oregon Forest Practice Rules. The intake end of relief culverts shall be provided with a sediment catching basin 3 feet in diameter at the bottom. The outlet end of any culvert which would allow water to erode embankment soil into waters of the State shall be provided with a downspout or other approved slope protection device.

All coupling band designs shall be in accordance with the minimum requirements of the Highway Division (Drawing Nos. 2091-A and B), or as approved by STATE.

Polyethylene culverts between 3" to 10" in diameter shall meet the requirements of AASHTO M-252-851. Polyethylene culverts between 10" to 36" in diameter shall be double walled and meet the requirements of AASHTO M-294-901, Type S.

The intake ends of culverts shall be marked by driving white fiberglass posts within 6 inches of the downgrade side. Posts shall be a minimum of 6 feet long, and be a minimum of 2½ inches in width, with the spade driven 2 feet into the ground.

Tamping is required.

Culverts 24 inches in diameter or larger shall have 1:1 beveled inlets.

All removed culverts shall be hauled to an approved refuse site off of State land.

CULVERT LIST

CULVERT NO.	DIAMETER (Inches)	LENGTH (Feet)	ROAD SEGMENT POINT TO POINT	STATION
1	18	40	4A to 4B	0+00
2	18	30	4A to 4B	9+00
3	18	40	I1 to I3	17+00
4	18	30	I1 to I3	19+35
5	18	30	I1 to I3	22+90
6	18	30	I1 to I3	27+60
7	18	40	I1 to I3	41+05
8	18	40	I1 to I3	51+65
9	18	40	I1 to I3	54+40
10	18	30	I3 to I4	12+30
11	18	30	I3 to I4	20+55

EXHIBIT "C"

CULVERT LIST

CULVERT NO.	DIAMETER (Inches)	LENGTH (Feet)	ROAD SEGMENT POINT TO POINT	STATION
12	18	30	I3 to I4	35+80
13	18	30	I3 to I4	58+65
14	18	30	I3 to I4	63+35
15	18	30	I3 to I4	77+45
16*	24	50	I3 to I7	0+60
17	18	30	I7 to I8	7+05
18*	112 x 75	65	I7 to I9	9+40
19*	36	60	I7 to I9	23+45
20	18	30	I9 to I10	6+75
21	18	30	I9 to I12	14+65
22	18	30	I12 to I13	5+85
23	18	30	I12 to I13	11+15
24	18	30	I12 to I13	34+60
25	18	30	I12 to I13	45+75
26	18	30	I14 to I15	2+95
27	18	30	I14 to I15	11+75
28	18	30	I14 to I15	25+25
29	18	30	I16 to I17	0+10
30	18	30	I16 to I17	8+20

* Indicates culverts that do not require markers.

State Timber Sale Contract
No. 341-03-07
Rock Creek Stand Improvement

EXHIBIT "D"

ROCK PIT DEVELOPMENT AND USE

(1) PURCHASER shall prepare a written development plan for the pit area. The plan shall be submitted to STATE for approval prior to conducting any operation in the pit area.

The plan shall include, but not be limited to:

(a) Location of benches and roads to benches.

(b) Disposal site for debris and overburden.

(c) Erosion control measures.

(2) PURCHASER shall conduct the operations relative to the disposal of waste material in such manner that silt, rock, debris, dirt, or clay shall not be washed, conveyed, or otherwise deposited in any stream. All waste shall be deposited at an approved "waste disposal site."

(3) All overburden shall be hauled to the designated waste area as directed by STATE.

(4) The quarry floor shall be developed to provide drainage away from the rock pit. Benches shall be constructed at intervals of 40 feet or less in height and shall be a minimum of 20 feet in width. Any gravel or talus slopes shall be left with a working face at an angle of 60 degrees or less. There shall be a minimum of 1 bench with an access road to it. Said bench shall be easily accessible with tractors.

(5) Pit face shall be developed in a uniform manner.

(6) Oversized material that is produced shall be piled in a designated area adjacent to the pit. It shall not be wasted.

(7) Upon completion of use, the pit site and access roads shall be left in a condition free from overburden and debris. Access roads to the pit, and the pit floor, shall be cleared at the termination of use. Rock pit access roads shall be blocked upon completion of rock pit use as directed by STATE. Rock pit roads shall be waterbar constructed to provide drainage as specified in Exhibit "H" and be blocked as directed by STATE.

(8) Proper winterization and storm-water control measures such as waterbarring, drainage, utilization of filter bales, mulching and/or blocking access shall be constructed and maintained to protect the watershed and project work, as directed by STATE.

PIT-RUN AND RIPRAP ROCK SPECIFICATIONS

Grading Requirements

For 6"-0" Pit-Run	Passing	10" sieve	100%
	Passing	6" sieve	65%

For 24"-6" Riprap — A minimum of 50 percent of the material shall measure a minimum of 24 inches, measured in one dimension. Material shall be clean, well graded, and free of 2"-0" fines.

Control of gradation shall be by visual inspection by STATE.

State Timber Sale Contract
No. 341-03-07
Rock Creek Stand Improvement

EXHIBIT "E"

LOGGING ROAD BRUSHING SPECIFICATIONS

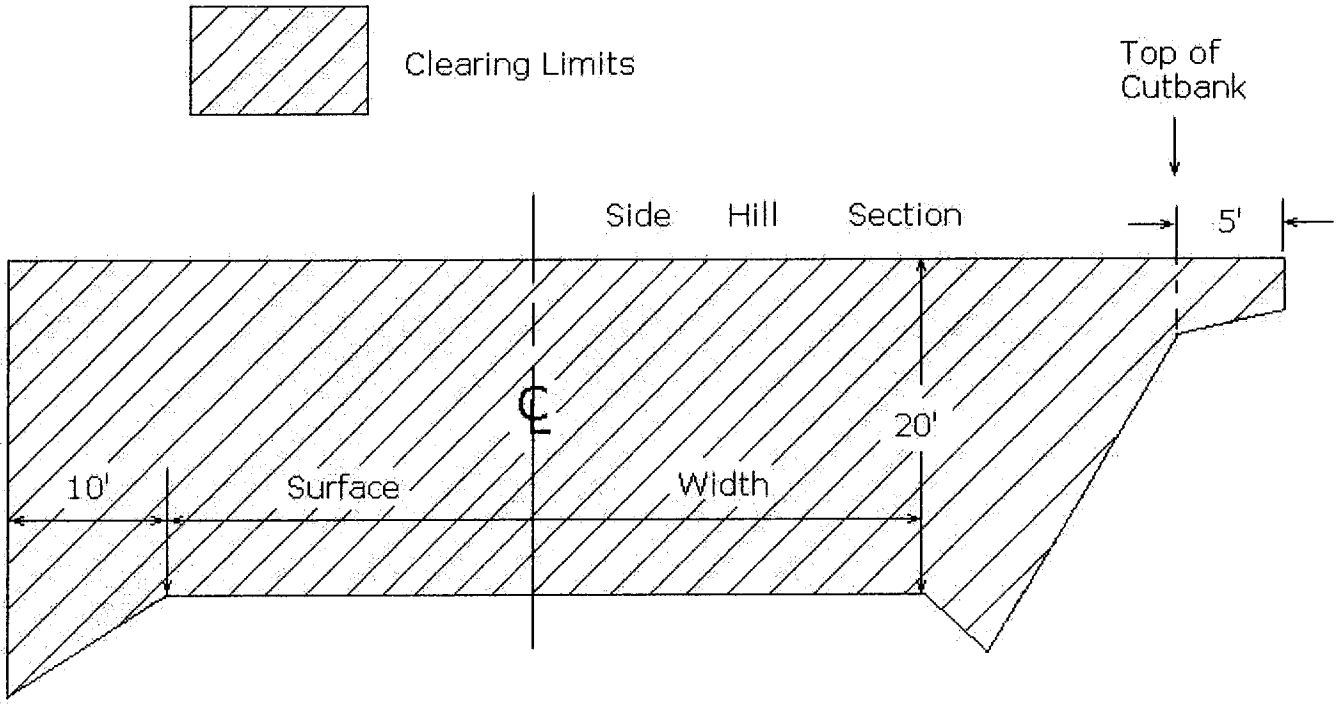

REQUIREMENTS

The minimum height of clearing shall be 15 feet, and the minimum width of clearing on the cutslope side of the road shall be 5 feet beyond the top of the cutbank.

Brush and trees shall be cut to a maximum height of 6 inches above the ground surface or obstructions such as rocks or existing stumps.

Debris resulting from the brushing operation shall be removed from the roadway, cutslope, ditches, and water courses and may be scattered downslope from the road or placed in other stable locations. Large debris, 6 inches or larger in diameter, shall be cut into lengths of 6 feet or less to facilitate rapid decay, unless otherwise approved by STATE.

Conifer trees larger than 6 inches in diameter at stump height, located within clearing limits but outside of the ditchline or shoulder, shall not be cut down, but shall be limbed for road visibility.

EXHIBIT "F"

TYPE F STREAM CROSSING

(1) Type "F" stream fill reconstruction must allow free passage of fish as provided in the Oregon Forest Practice Rules. Modifications of the existing culvert geometry shall be required to allow free passage of fish.

(2) Work shall be conducted only during periods of low water flows and between July 1 and September 15, annually. STATE shall be notified a minimum of 48 hours prior to beginning work. STATE has prepared a "Written Plan" for this work.

(3) A minimum of 1-½ cubic yard, track mounted excavator shall be used for all excavation, stream development/preparation, and riprap replacement. Use of an on site hydraulic rock hammer may be required for the breaking of rock strata encountered during the development of the culvert bed.

(4) Excavated debris and soil materials unsuitable for fill construction shall end-hauled to "Waste Areas" as direct ed by STATE. The existing removed culvert shall be hauled to an approved refuse site off of STATE land.

(5) Waste materials shall be sloped for drainage and stability, as directed by STATE. Grass seed and straw mulch shall be applied to all exposed areas, bare soils and waste materials as directed by STATE. Applied mulch shall be a minimum of 3 inches deep and provide a uniform cover.

(6) Remove existing fill, culvert, and any logs or woody debris.

(7) De-watering of the work site shall be accomplished prior to the removal of any additional fill material for the development of the culvert bed and stream channel. The work site shall be de-watered by the use of cofferdams, temporary diversion ditches and/or drainage structures.

(8) Remove additional fill and logs or woody debris for the development of the new culvert bed. The development of the new culvert bed will **NOT** be situated the same as the old culvert bed. The location of the new culvert will be calculated by using control points set in the field. The inlet of the new pipe will be set by referencing to Control Point 1 (HD = 44.98 feet at an Azimuth = 292 degrees and a Vertical Offset of 8.26 feet). The outlet end of the new culvert will be set by referencing to Control Point 3 (HD = 27.28 feet at an Azimuth = 142 degrees and a Vertical Offset of 3.14 feet). Utilize 90 cubic yards of 1½"- 0" crushed rock for the culvert bed and for backfill.

(9) Develop the stream channel for a distance of 25 feet upstream of the inlet of the new culvert and 25 feet downstream of the outlet. The stream channel width will be 8-feet and stream channel banks shall be sloped at 1-½:1.

(10) Native (excavated) stream sediment materials shall be placed in the culvert barrel to a depth of 18 inches. Excavated boulders or riprap rock shall be placed and embedded at the outlet of the new culvert to allow additional stream sediment materials to settle in the barrel of the culvert.

(11) Fill reconstruction backfill shall consist of select materials and be obtained from Big Noise Quarry, as directed by STATE. Backfill materials shall be hauled in where necessary and thoroughly compacted in accordance with Exhibit B. Utilize 100 cy of 24"-6" riprap for armoring fill slopes. The riprap rock shall be placed and tamped at a 1-½:1 slope for a minimum thickness of 2 feet beginning at the toes. Finished sub-grade width shall be 20-feet with a 16-foot running surface. A minimum of 64 cubic yards 4"-0" base rock will be utilized to restore the base surfacing course for a compacted depth of 8 inches. A minimum of 49 cubic yards of ¾"-0" crushed rock will be utilized to restore the running surface course for a compacted depth of 6 inches. Crushed rock will be processed and compacted in accordance with Exhibit B.

EXHIBIT "F"
TYPE F STREAM CROSSING

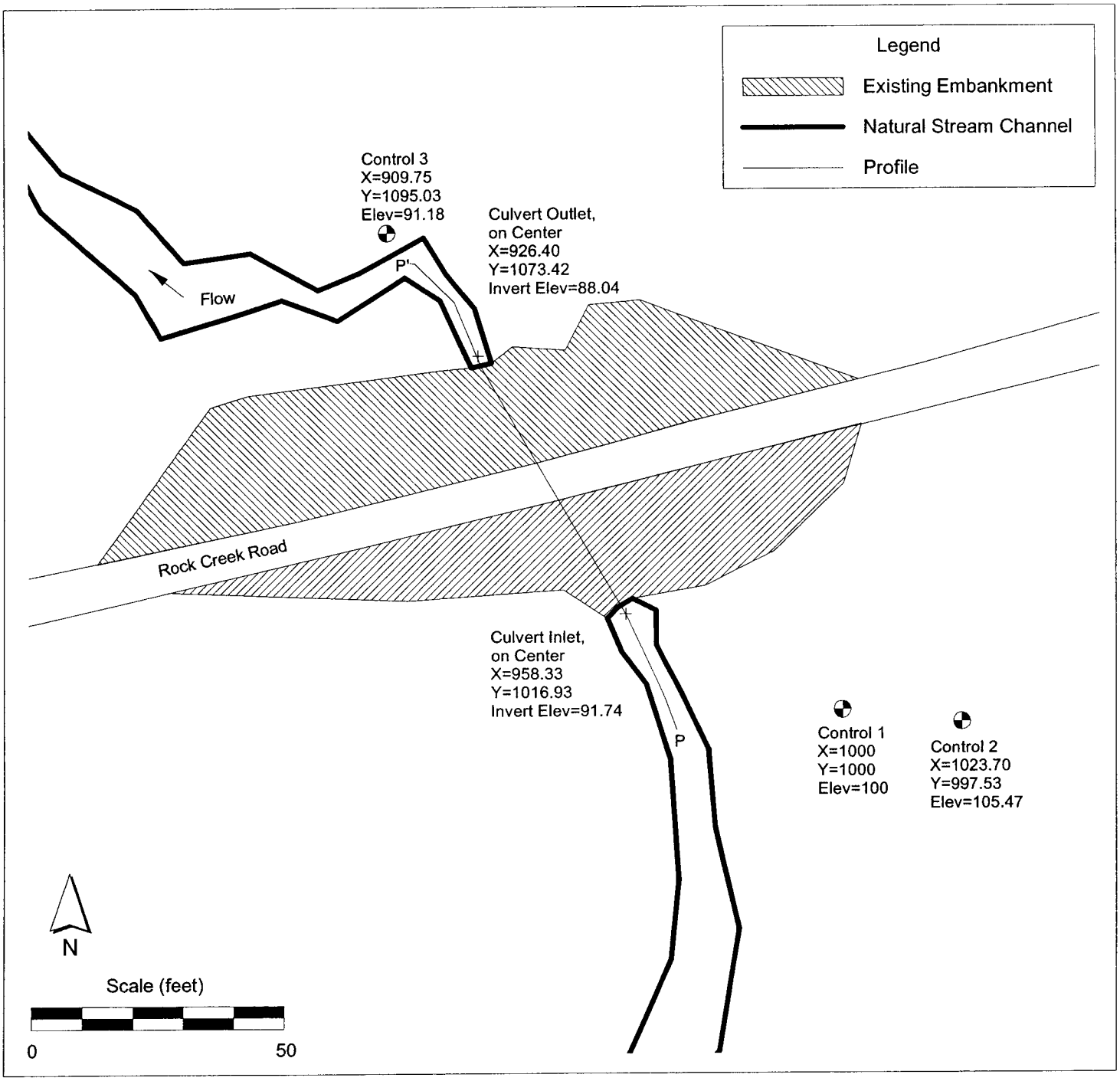

Oregon Department of Forestry
Astoria District
Engineering Unit

Point I7 to Point I9
Station 9+40
Rock Creek Tributary
SW1/4, Section 23, T8N, R7W, W. M.
Clatsop County, Oregon

EXHIBIT "F"
TYPE F STREAM CROSSING

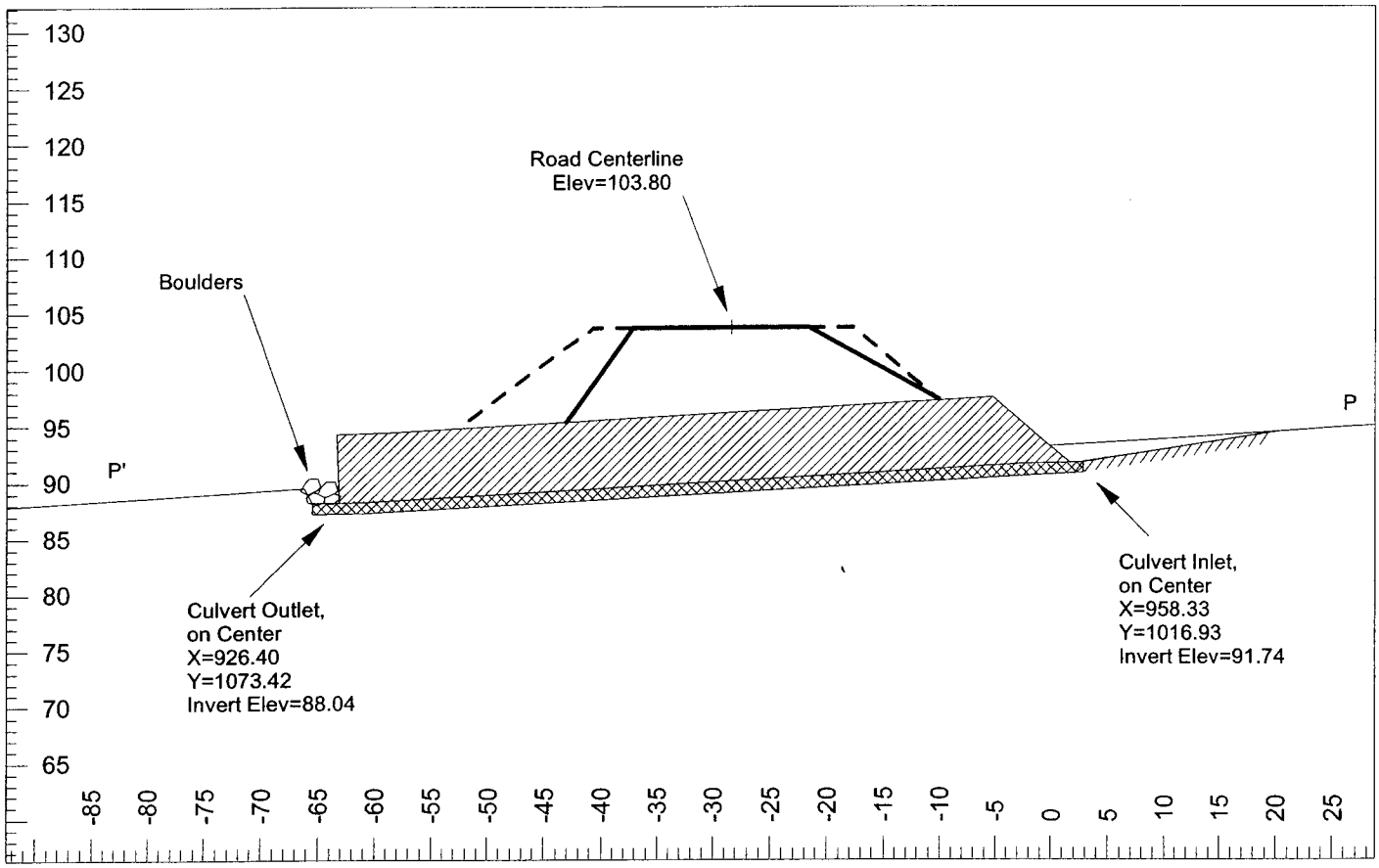

Legend

- Existing Embankment
- Designed Embankment
- Existing Stream Bottom
- Pipe Arch
- Crushed Bedding Rock (Min. 1 foot of Depth)
- Excavated Stream Bottom

Oregon Department of Forestry
Astoria District
Engineering Unit

Point I7 to Point I9
Station 9+40
Rock Creek Tributary
SW1/4, Section 23, T8N, R7W, W. M.
Clatsop County, Oregon

State Timber Sale Contract
No. 341-03-07
Rock Creek Stand Improvement

EXHIBIT "G"

DISSIPATER SPECIFICATIONS

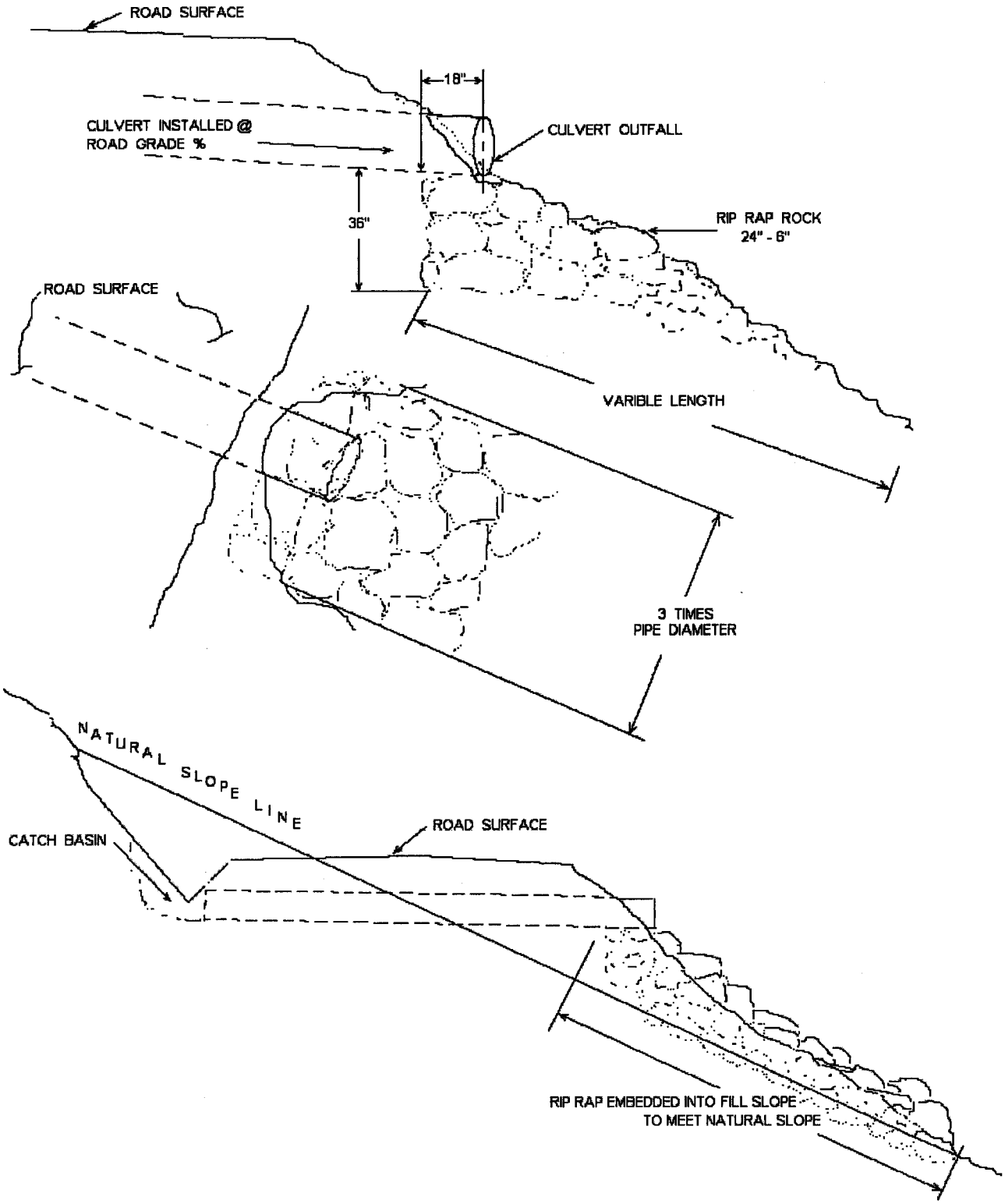

State Timber Sale Contract
No. 341-03-07
Rock Creek Stand Improvement

EXHIBIT "H"

WATERBAR SPECIFICATIONS

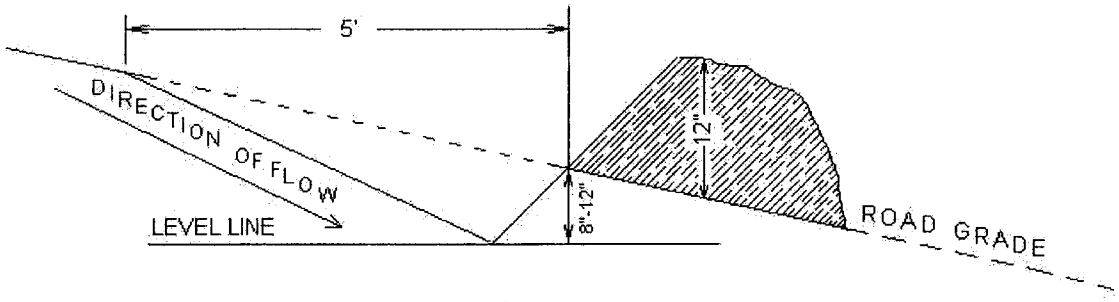

PROFILE

CONSTRUCT DITCH THRU ANY EXISTING BERM.

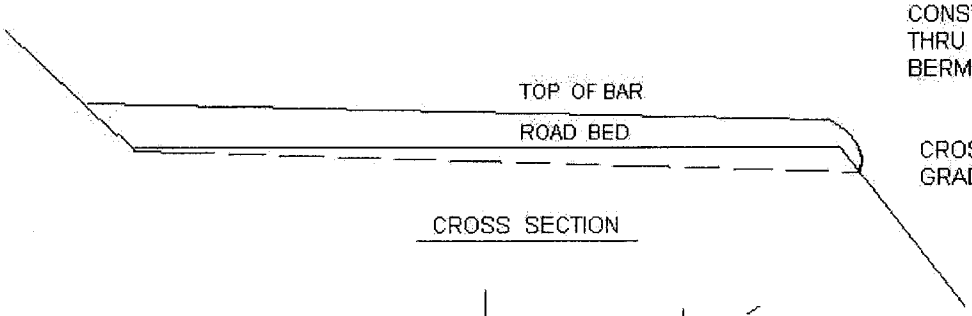

CROSS DRAINAGE GRADIENT MINIMUM 3%

CROSS SECTION

SPACING OF WATERBARS:

ROAD GRADE	DISTANCE
≤ 5%	400'
6-10%	200'
11-15%	150'
16-20% or Greater	100'

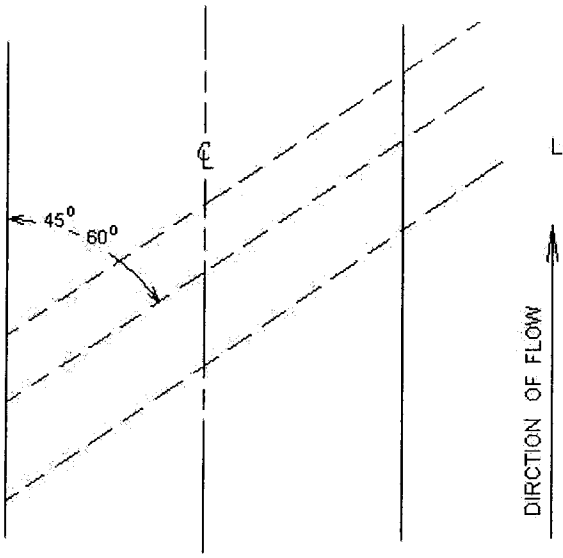

LEAD OFF DITCH

PLAN VIEW

WATERBAR SPECIFICATIONS
FOR CROSS DITCHING #298

EXHIBIT "I"

SPECIFICATIONS FOR BRUSH AND SLASH SHOVEL PILING

Description of Work to be Done

Areas designated for work under the contract shall be treated according to the specifications given below:

Clearing - Brush, logging slash, and other debris shall be cleared from planting sites and piled in windrows or piled so that 80 percent or more of the soil organic layer is exposed. All woody vegetation (other than conifer trees) is defined as brush in this exhibit.

Piles - shall be located at least 75 feet apart and shall be no more than 75 feet long. Piles shall be located inside the project area designated for piling and shall be more than 75 feet from any edge or standing conifer tree. Piles shall be built to a height of 3 to 4 feet and then covered to prevent water from reaching the slash. STATE shall supply the materials used for covering the slash. Additional woody debris shall be piled on top of the covered piles to complete the piling, as directed by STATE. Logs and chunks which are suitable for firewood shall be piled separately from slash, near roads and landings and alongside the road in locations designated by STATE.

Conifer Trees - shall be saved, unless otherwise directed by STATE.

Skid Trails - shall be ripped to a depth of 12 inches.

Residual Logs – At least 600 cubic feet and not more than 900 cubic feet of hard conifer logs per acre to be retained in each area. Logs shall contain a minimum of 10 cubic feet of volume and be no shorter than 6 feet in length. At least 2 pieces per acre of selected down logs shall be greater than 24 inches in diameter at the large end, where available. Down logs shall be well distributed across the area.

Protective Measures - shall comply with Oregon Forest Practice Rules issued per ORS 527.610 to 527.992. Examples of protective measures are: (1) waterbarring tractor trails where necessary to prevent runoff toward streams; (2) not windrowing in streams or streamways; and (3) leaving stream buffers along designated streams.

Work specifications may be modified or waived only upon written notice from STATE.

EXHIBIT "I"

SPECIFICATIONS FOR BRUSH AND SLASH SHOVEL PILING

Equipment Type, Equipment Operation, and Conduct of Work

The specifications given below are requirements for equipment type, equipment operation, and conduct of work under the contract.

Shovel - shall be a track-mounted machine with a ground-pressure rating of not more than 6.8 PSI and a net horsepower of 85 or more. The machine shall be capable of a minimum horizontal reach of 26 feet and a minimum vertical reach of 16 feet. For shovel piling, the bucket shall be a hydraulically controlled, 4 to 5-foot wide, "clamshell-style bucket with rake arms," with a 360-degree continuous rotation, and tooth length on rake arm shall be greater than 14 inches long, unless otherwise approved in writing by STATE.

Operator - must be experienced in operating similar equipment on land clearing operations, be able to operate the equipment proficiently, and pile the debris on the area as directed by STATE.

Support - including transport, other equipment, replacements, supplies, maintenance, and repairs shall be furnished as required to complete work; and shall be furnished without cost to STATE, other than as agreed under the contract terms.

Work Scheduling - work shall be accomplished only during the specified Project Period and started within 14 calendar days after completion of yarding activities on Areas 3, 4, A, B, C, D and E. Operations shall provide for continual operation until contract work is completed, unless interrupted by poor weather, fire closures, or other uncontrollable circumstances. Equipment breakdowns shall be repaired without undue delay, and provision shall be made for replacement of equipment to prevent prolonged delays. Piling operation shall not be allowed when operations might damage sites or affect stream flows. Any exception to these instructions must be authorized in writing by STATE.

STATE Representative - shall provide directions for the conduct of work according to specifications.

FORM 629.343-307
Rev. 3/01

EXHIBIT "J"
OREGON DEPARTMENT OF FORESTRY

SCALING INSTRUCTIONS -- LOCATION APPROVAL -- BRAND INFORMATION

(1) ORIGINAL REGISTRATION ☐ Date _____
REVISION NUMBER _____ ☐ Date _____
CANCELLATION ☐ Date _____

(2) TO: _____
(Third Party Scaling Organization)

(3) FROM: Astoria Phone 503-325-5451
(State Forestry District)
Address 92219 Highway 202, Astoria, OR 97103

(4) PURCHASER: _____
Address _____

(5) MINIMUM SCALING SPECIFICATIONS			CLASS		
SPECIES	SCALING DIAMETER INCHES	*NET SCALE VOLUME	PER MBF	** SUM	SUB
Conifers	--	10	X		
Hardwoods	--	10	X		

* Apply minimum volume test to whole logs over 40' Westside; 20' Eastside.
** Sum (if indicated): see instructions and explain in Item (20).

	YES	NO
(6) WESTSIDE SCALE: Actual taper all logs over 40' scaling length	☒	☐
(7) EASTSIDE SCALE: *Actual taper butt logs over 40' scaling length	☐	☒
(8) PENCIL BUCK back to Minimum Scaling Diameter _____	☐	☒
(9) ADD-BACK VOLUME -- Deductions due to delay	☒	☐

(10) APPROVED SCALING LOCATIONS	Species	Yard	Truck

(11) NOTICE OF CANCELLATION OF BRAND:
Effective Date: _____

_____
State Forester's Representative

(12) SALE NAME Rock Creek Stand Improvement
COUNTY Clatsop

(13) STATE CONTRACT NUMBER 341-03-07

(14) SCALE: westside ☒ eastside ☐ cubic foot ☐

(15) STATE BRAND REGISTRATION NUMBER _____

(16) BUREAU BRAND CODE NUMBER _____

(17) STATE BRAND INFORMATION:
(COMPLETE)

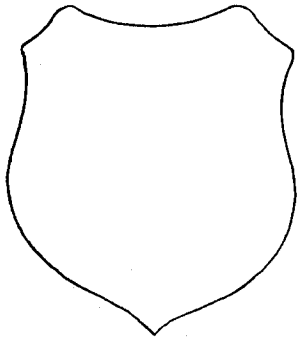

(18) PAINT REQUIRED: YES ☒
COLOR Orange

(19) SPECIAL SCALES
PEELABLE CULL (all species)
UTILITY/PULP (all species)
NO DEDUCTIONS ALLOWED
FOR MECHANICAL DAMAGE
OTHER: _____
OTHER: _____

(20) REMARKS: _____

Operator's Name (Optional inclusion by District): _____

(21) SIGNATURES:

_____
Purchaser or Authorized Representative Date

_____
State Forester Representative Date

Distribution: ORIGINAL: Salem / COPIES: TPSO (4), Purchaser, Operator, District, Mgmt. Unit (Sunset)

EXHIBIT "J"

INSTRUCTIONS FOR FORM 343-307 (rev. 5/01)

(1) Check appropriate box. REVISION NUMBER requires comments. CANCELLATION requires Item (21). Complete date.

(2) Designate Third Party Scaling Organization (TPSO). Send 4 copies to TPSO, 1 to purchaser, 1 to Salem, and keep such copies as to district needs.

(3) State District office, address and phone.

(4) Enter Purchaser's business name and address as it appears on the contract.

(5) Minimum Scaling Specifications. Review Section 45, "Log Removal," of the contract. Species, or combined species can be separate entries. Information serves as a basis for scaling (see also Items (13) thru (17)), and is required to show existence on the sale. **PerM** (per mbf). **SUM** (lump sum material). **SUB** (submerchantable material. SUB, as used by the State, references that material containing at least 10 bf (net) but less than the lower merchantable net volume limit or grade requirements for other merchantable (PerM) entries. PerM, SUM, and SUB must be indicated by checking the appropriate column. Species with the same specifications and value are combined into one entry. PerM and SUB require scaling therefore complete specifications. SUM need not be scaled, hence no specifications. Loads containing only SUM are to be ticketed if so instructed in Item (19). Mixed loads of SUM, PERM and/or SUB species will always be scaled.

(6) Westside -- actual taper segment scale. Check Yes or No. Special Service Rules on file with TPSO. See: Segment Scaling and Grading of Long Logs -- All Species -- State Forestry Department Scaling Practices (Westside).

(7) Eastside -- actual taper/taper table segment scale. Special Service Rules on file with TPSO. See: Segment Scaling and Grading of Long Logs -- All Species -- State Forestry Department Scaling Practices (Eastside). Items with * follow U.S. Forest Service Eastside rules.

(8) Pencil Buck. Check NO if a westside sale, optional for eastside sales.

(9) Add-Back Volume. Add-Back is normally checked YES. Scaler records deductions (sap rot, weather checks, etc.) caused by an abnormal delay in removal. Enter separately on scale ticket. TPSO provides State with summaries that include this as a net volume by species. Salvage sales and certain other circumstances may require that "NO" be checked.

(10) Show scaling locations only applicable to TPSO. Not necessary to list markets. If all species are scaled at same location, enter "ALL."

(11) When logging is complete, recall branding hammers, date and sign where indicated, check CANCELLATION box at top of form, and send to TPSO.

(12) Enter sale name and county.

(13) Enter sale contract number.

(14) Check Westside or Eastside log scale. Cubic foot refers to Northwest Log Rules Cubic Foot Scale.

(15) Oregon Forest Products Brand Registry Number (optional).

(16) DO NOT USE -- TPSO will fill in when applicable.

(17) Show one brand only. Complete drawing. If more than one brand is assigned to the sale, (1) make separate form for each brand, and (2) on each form, explain and show other brand(s) under REMARKS, Item 19.

(18) Check YES and designate orange.

(19) Special Scales. These are the Special Scales that will be applied. If "Other" is indicated, please describe. Give comments in Item (19).

(20) Use this space to designate weight conversion factors, or any other explanations to clarify scaling requirements. If additional scaling locations are approved, prepare another form showing all (old and new) locations. Check REVISION box at top of form and explain under remarks. Route as indicated.

(21) Require purchaser to sign and date completed form.